Embedded Solutions

P512 - Reflective Memory PMC

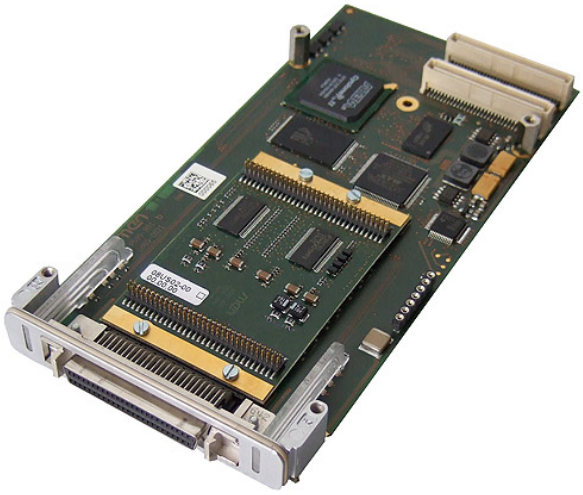

- **32-bit/33-MHz PMC**
- **1 LVDS channel**
- **Usable in a fully connected mesh**
- **Multi-mode up to 2 meters**
- **32 MB DDR2 SDRAM**
- **Connection speed 230 MHz, 86 MB/s**
- **-40 to +85°C with qualified components**

The P512 offers Reflective Memory functionality e.g. for redundant computer structures in safety-critical applications. Reflective memory is a memory bus technology from Encore Computer that allows simultaneous reads and writes to multiple memories. It can be used to share memory among multiple CPUs. The advantage of reflective memory is the possibility to set up deterministic real-time communication networks across computer systems and operating systems.
Each P512 module offers one LVDS channel with a connection speed of 230 MHz and 86 MB/s. The modules can be interconnected in a fully connected mesh and support multi-mode up to two meters. Each computer in a system needs one PMC for each connection to another computer (2 computers: 1 PMC each, 3 computers: 2 PMCs each etc).
The module is equipped with 32 MB DDR2 DRAM.
The P512 is a PMC mezzanine card suitable for any PMC compliant host carrier board in any type of bus system, i.e. CPCI, VME or on any type of stand-alone SBC in telecommunication, industrial, medical, transportation or aerospace applications. It supports 32 bits/33 MHz. Appropriate PMC carrier cards in 3U, 6U and other formats are available from MEN or other manufacturers.

mikro elektronik
gmbh • nürnberg

Embedded Solutions

Technical Data

Reflective memory
- 1 LVDS channel
- Usable in fully connected mesh
- Multi-mode up to 2 meters
- Connection speed 230 MHz, 86 MB/s

Memory
- 32MB SDRAM memory
  - Soldered
  - DDR2
  - 132MHz memory bus frequency
  - FPGA-controlled
- 2MB non-volatile Flash
  - For FPGA data and optionally Nios® firmware
  - FPGA-controlled

PMC Characteristics (PCI)
- Compliant with PCI Specification 2.2
- 32-bit/33-MHz, 3.3V V(I/O)
- Target

Peripheral Connections
- Via front panel on a shielded 50-pin HP D-Sub SCSI 2 receptacle connector

Electrical Specifications
- Supply voltage/power consumption:
  - +5V (-3%/+5%),tbd
  - +3.3V (-5%/+5%), tbd

Mechanical Specifications
- Dimensions: conforming to IEEE 1386.1
- Weight: tbd

Environmental Specifications
- Temperature range (operation):
  - -40..+85°C (qualified components)
  - Airflow: min. 1.0m/s
- Temperature range (storage): -40..+85°C
- Relative humidity (operation): max. 95% non-condensing
- Relative humidity (storage): max. 95% non-condensing
- Altitude: -300m to + 3,000m
- Shock: 15g/11ms
- Bump: 10g/16ms
- Vibration (sinusoidal): 1g/10..150Hz
- Conformal coating on request

MTBF
- tbd @ 40°C according to IEC/TR 62380 (RDF 2000)

Safety
- PCB manufactured with a flammability rating of 94V-0 by UL recognized manufacturers

EMC
- Conforming to EN 55022 (radio disturbance), IEC1000-4-2 (ESD) and IEC1000-4-4 (burst)

Embedded Solutions

Diagram

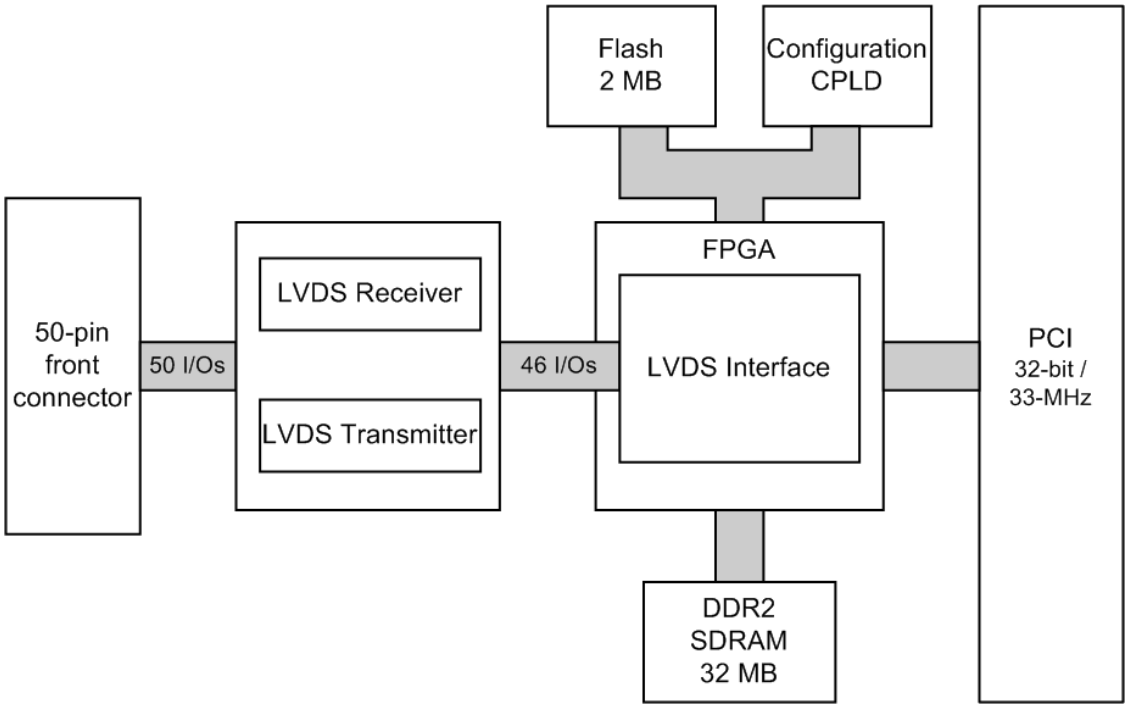

mikro elektronik
gmbh • nürnberg

Embedded Solutions

Ordering Information

Standard Hardware

15P512-00	1 channel (TX/RX) reflective memory usable with 2nd P512 and special crossed cable, -40..+85°C with qualified components

Miscellaneous

05P512-00	Crossed cable (TX/RX) for connection of two P512 reflective memory PMCs , -40..+85°C

For the most up-to-date ordering information and direct links to other data sheets and downloads, see the P512 online data sheet under » www.men.de.

Germany
MEN Mikro Elektronik GmbH
Neuwieder Straße 5-7
90411 Nuremberg
Phone +49-911-99 33 5-0
Fax +49-911-99 33 5-901
E-mail info@men.de
www.men.de

France
MEN Mikro Elektronik SA
18, rue René Cassin
ZA de la Châtelaine
74240 Gaillard
Phone +33 (0) 450-955-312
Fax +33 (0) 450-955-211
E-mail info@men-france.fr
www.men-france.fr

USA
MEN Micro, Inc.
24 North Main Street
Ambler, PA 19002
Phone (215) 542-9575
Fax (215) 542-9577
E-mail sales@menmicro.com
www.menmicro.com

The date of issue stated in this data sheet refers to the Technical Data only. Changes in ordering information given herein do not affect the date of issue.
All brand or product names are trademarks or registered trademarks of their respective holders.
Information in this document has been carefully checked and is believed to be accurate as of the date of publication; however, no responsibility is assumed for inaccuracies. MEN Mikro Elektronik accepts no liability for consequential or incidental damages arising from the use of its products and reserves the right to make changes on the products herein without notice to improve reliability, function or design. MEN Mikro Elektronik does not assume any liability arising out of the application or use of the products described in this document.
The products of MEN Mikro Elektronik are not suited for use in nuclear reactors or for application in medical appliances used for therapeutical purposes. Application of MEN's products in such plants is only possible after the user has precisely specified the operation environment and after MEN Mikro Elektronik has consequently adapted and released the product.
Copyright © 2009 MEN Mikro Elektronik GmbH. All rights reserved.

mikro elektronik
gmbh • nürnberg